12W Panel Isolated HPF LED Driver

Actual Board Photo

Features

- Wide Input voltage range from 100Vac-300Vac.
- Output 300mAmp
- Highly accurate constant LED current (+/-3%)
- Up to 12W power drivability.
- Active PFC with PF > 0.95
- THD Less than 15%
- Protections: Short Circuit/Open Circuit/Over temp.
- Surge protection: >2.5KV
- Efficiency: > 85%

Dimensions

- Length: 56mm
- Height: 31mm

Applications

- High Wattage Bulb
- Ceiling Light
- Down Light

Reference Schematic

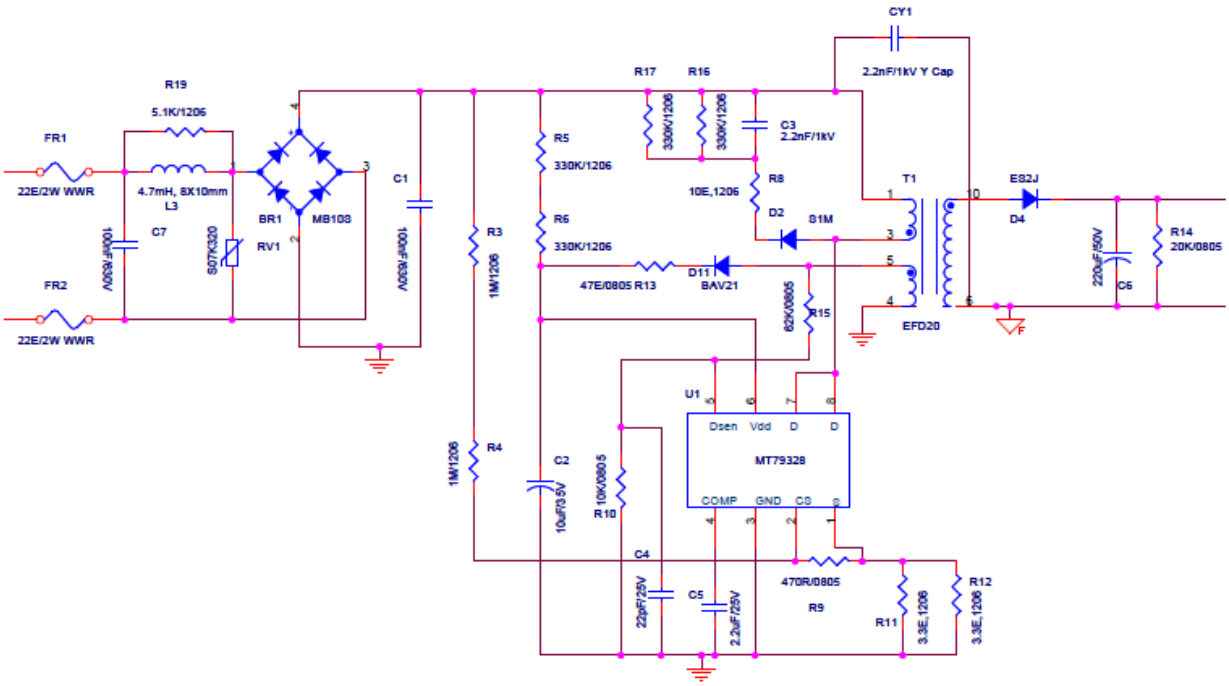

Regd Off: C-1/268, 2nd Floor, Yamuna Vihar, Delhi-110053(INDIA)
Branch Off: C-30, Ground Floor, Patpar Ganj Industrial area, Delhi-110092 (India)
Ph:+91 9810456622 E-mail: sanjay.kumar@ventus.in Web: www.ventus.in
CIN#: U31908DL2013PTC257349, GSTIN#: 07AAECV5608C1ZJ